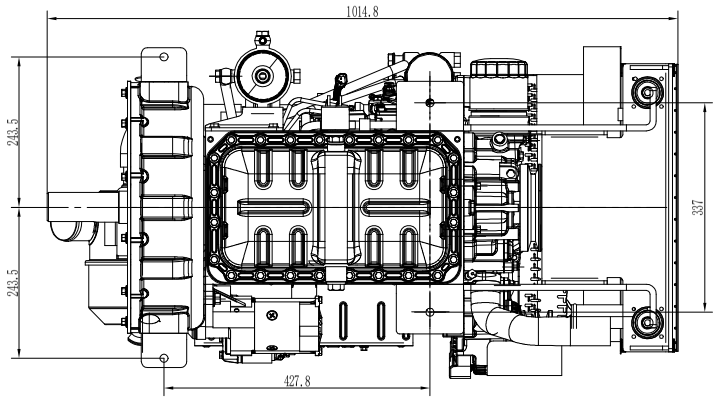
1014.8
243.5
243.5
337
427.8

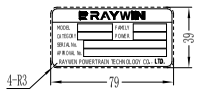
BRAYWIN
92
79
4-R3

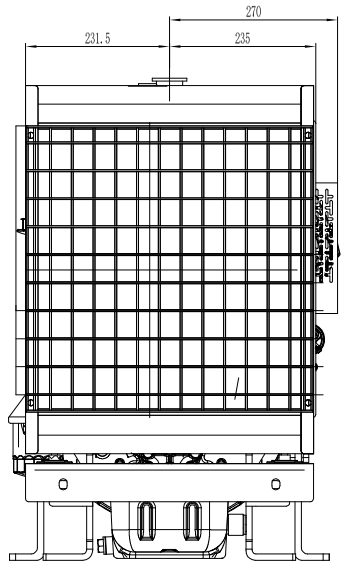
270
231.5
235

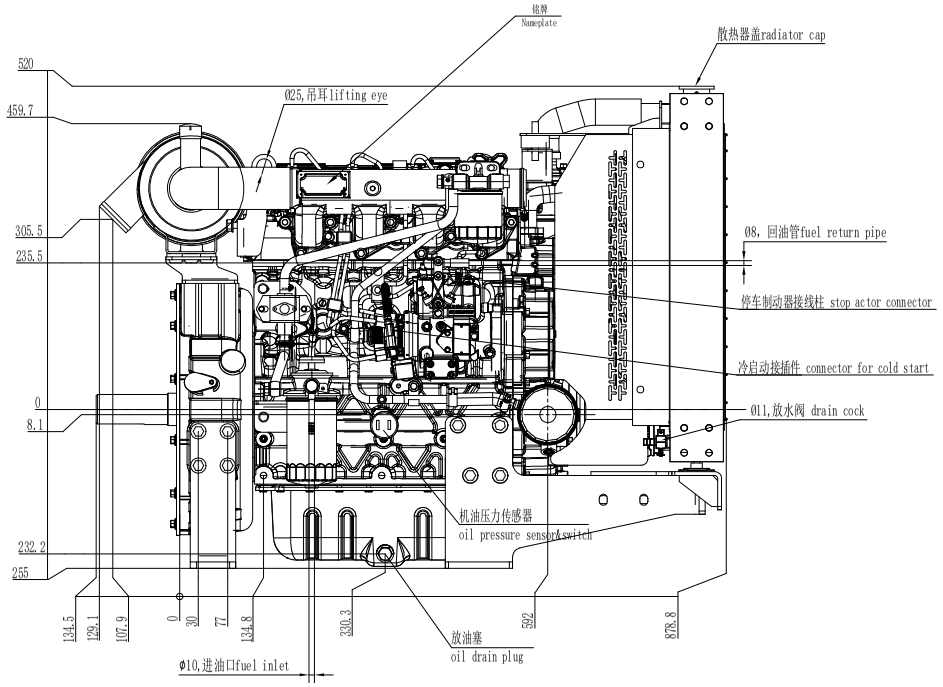
铭牌
Nameplate
散热器盖radiator cap
Ø25,吊耳lifting eye
08,回油管fuel return pipe
停车制动器接线柱 stop actor connector
冷启动接插件 connector for cold start
011,放水阀 drain cock
机油压力传感器
oil pressure sensor&switch
放油塞
oil drain plug
Φ10,进油口fuel inlet
520
459.7
305.5
235.5
0
8.1
232.2
255
134.5
129.1
107.9
0
30
77
134.8
330.3
592
678.8

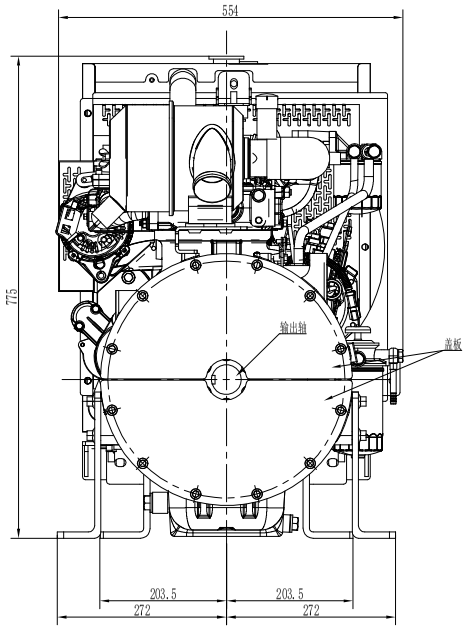
554
775
输出轴
盖板
203.5
272
203.5
272

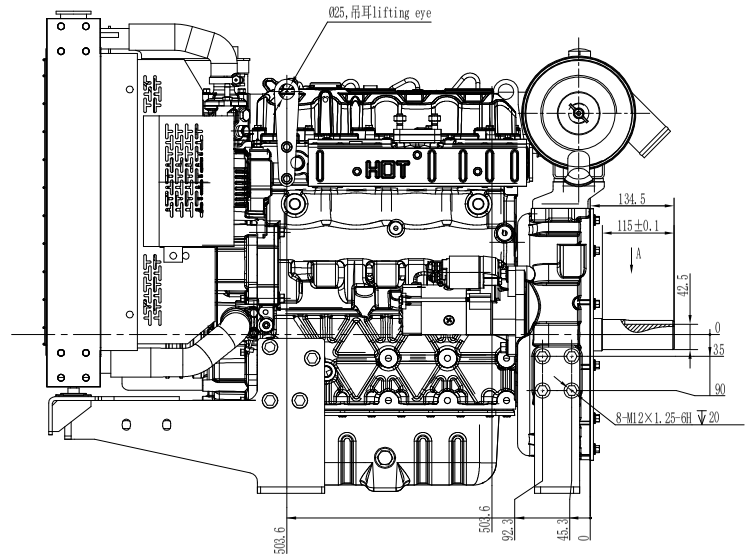
Ø25,吊耳lifting eye
HOT
134.5
115±0.1
A
42.5
0
35
90
8-M12×1.25-6H ↧20
503.6
503.6
425.3
45.3
0

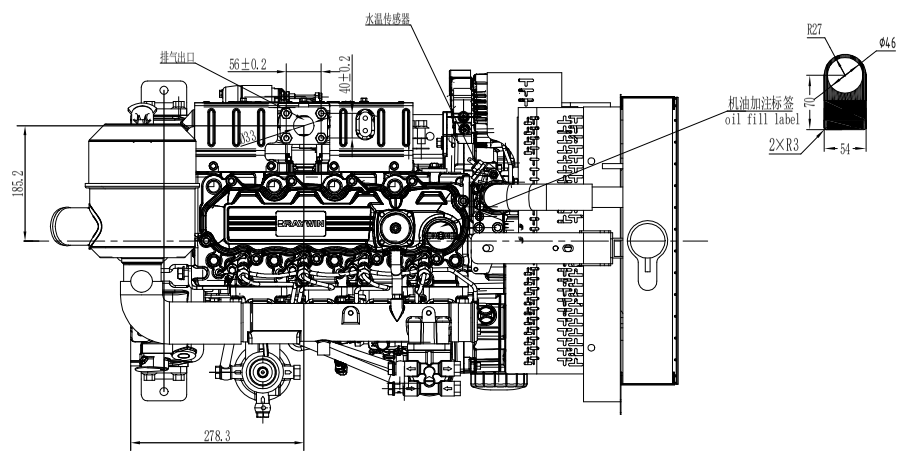
水温传感器
排气出口
56±0.2
40±0.2
机油加注标签
oil fill label
R27
Φ46
70
2×R3
54
185.2
278.3

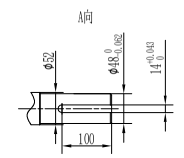
A向
Φ32
Φ48
14
100

| | | |